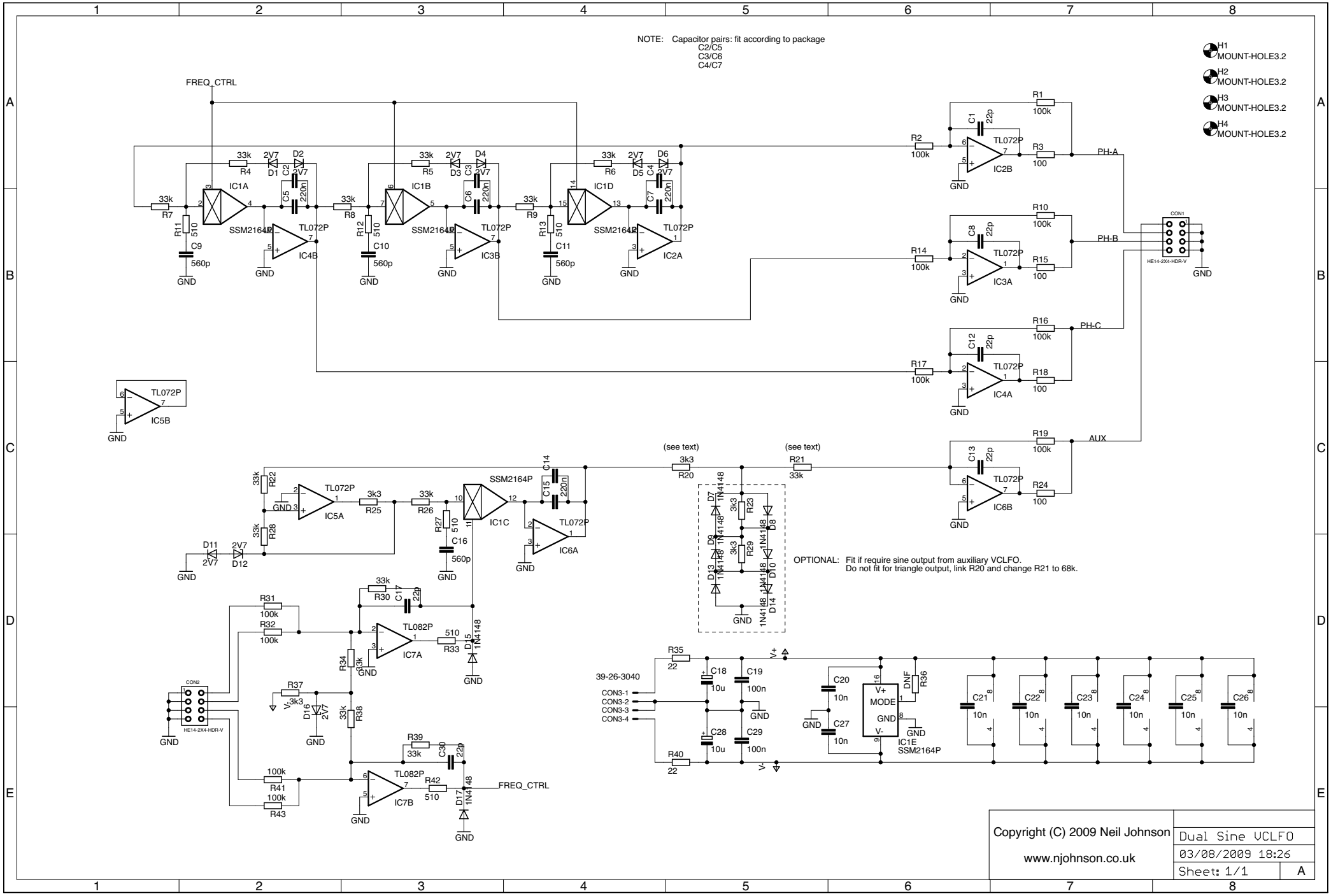
NOTE: Capacitor pairs: fit according to package
C2/C5
C3/C6
C4/C7
H1 MOUNT-HOLE3.2
H2 MOUNT-HOLE3.2
H3 MOUNT-HOLE3.2
H4 MOUNT-HOLE3.2
FREQ_CTRL
IC1A
IC1B
IC1C
IC1D
IC1E
SSM2164P
TL072P
IC2A
IC2B
IC3A
IC3B
IC4A
IC4B
IC5A
IC5B
IC6A
IC6B
IC7A
IC7B
TL082P
PH-A
PH-B
PH-C
AUX
CON1
HE14-2X4-HDR-V
CON2
39-26-3040
CON3-1
CON3-2
CON3-3
CON3-4
(see text)
OPTIONAL: Fit if require sine output from auxiliary VCLFO.
Do not fit for triangle output, link R20 and change R21 to 68k.
GND
V+
V-
MODE
DNF
Copyright (C) 2009 Neil Johnson
www.njohnson.co.uk
Dual Sine VCLFO
03/08/2009 18:26
Sheet: 1/1
A